ADDIS ABABA SCIENCE AND TECHNOLOGY UNIVERISITY

COLLEGE OF ENGINEERING

ELECTROMECHANICAL ENGINEERING DEPARTMENT

DIGITAL LOGIC DESIGN GROUP PROJECT

TRAFFIC LIGHT USING ASYNCHRONOUS COUNTER

Prepared by:-

1. DESALEGN LULIE …….ETS0486/14
2. DAWIT SOLOMON …….ETS0469/14
3. DAGMAWI ANTENEH….……...ETS0426/14
4. KALEAB BELAYNEH…….…….ETS0859/14

Submitted to: MR. MITKU B.

Submitted Date: May 20, 2025G.C

Table of Contents

Abstract 3

1. Introduction.....4

2. Methods 5

2.1 System Overview 5

2.2 State Breakdown.....5

2.3 *Components Used* 5

2.4 Asynchronous Up Counter with Reset 6

2.5 Traffic Light Logic Design.....7

2.6 Display Logic 9

3. Results and Discussion 9

3.1 Simulation Behavior.....9

3.2 Timing and Output Behavior.....10

3.3 Interpretation 10

4. Conclusion 11

Abstract

Traffic lights are vital in regulating road traffic and ensuring the safety of vehicles and pedestrians. This project presents the design and simulation of a hardware-based traffic light controller using **JK flip-flops configured as an asynchronous up counter**, along with basic logic gates. The controller is implemented with 14 states, each representing a specific configuration of traffic lights and their timing. A **reset mechanism is implemented at state 14**, ensuring the counter returns to state 0, thus allowing to recycle continuously.

A BCD-to-7 segment decoder is used to display the current state. The design ensures that the red light remains ON for 4 seconds (states 0–3), red and yellow together for 3 seconds (states 4–7), green for 4 seconds (states 8–11), and yellow alone for 2 seconds (states 12–13). All components are connected and simulated using Proteus. This project demonstrates a hardware-only, software-free solution to a real-world control problem, reinforcing fundamental concepts of sequential logic and design.

1. Introduction

Urban traffic management relies heavily on traffic lights, which must operate in predictable and timed sequences to prevent congestion and accidents. Most modern systems use microcontrollers for flexibility, but understanding the foundational hardware logic remains critical for students learning digital design.

This project implements using basic logic components—primarily **JK flip-flops configured as an asynchronous up counter**—to create a simple traffic light system without any programmable devices. The system cycles through 14 discrete states to simulate realistic traffic light behavior. A reset is triggered when the counter reaches state 14 (binary 1110), ensuring continuous operation. This design provides an excellent learning platform for grasping the fundamentals of **asynchronous counting**, and logic-based output decoding.

2. Methods

2.1 System Overview

The system is modeled as a finite state machine consisting of 14 states (from 0 to 13). The transitions between these states are driven by an **asynchronous up counter** built using **four JK flip-flops**. Each state corresponds to a different light combination and time duration, simulating the normal operation of a traffic signal.

2.2 State Breakdown

State Range	Duration	Lights ON	Description
0–3	4 seconds	Red	Vehicles must stop
4–7	3 seconds	Red + Yellow	Transition: Prepare to go
8–11	4 seconds	Green	Vehicles can go
12–13	2 seconds	Yellow	Transition: Prepare to stop
14 (1110)	—	RESET	Resets to 0

At binary 1110 (decimal 14), the system triggers a reset to recycle the sequence from state 0. This ensures a continuous and smooth operation of the traffic light.

2.3 *Components Used*

- ✓ **JK Flip-Flops (7473 IC):** Used to build a 4-bit asynchronous up counter.
- ✓ **Logic Gates (AND, OR, NOT, NAND)**: Used to decode binary states and control LED outputs.
- ✓ **BCD to 7-Segment Decoder (74LS47)**: Displays the current state.
- ✓ **LEDs**: Indicate traffic light signals (Red, Yellow, and Green).
- ✓ **Clock Source**: Provides timed pulses for state advancement.

2.4 Asynchronous Up Counter with Reset

The asynchronous (ripple) counter is built using 4 JK flip-flops:

- Each flip-flop toggles on the falling edge of the clock or the output of the previous flip-flop.
- The counter advances its binary value with each clock pulse.
- A reset logic circuit monitors when the count reaches binary 1110 (state 14) and resets all flip-flops to zero.
- We use a NAND gate to reset because the JK flip-flop is Active-Low.

This reset ensures that only 14 states (0–13) are active in the system cycles continuously.

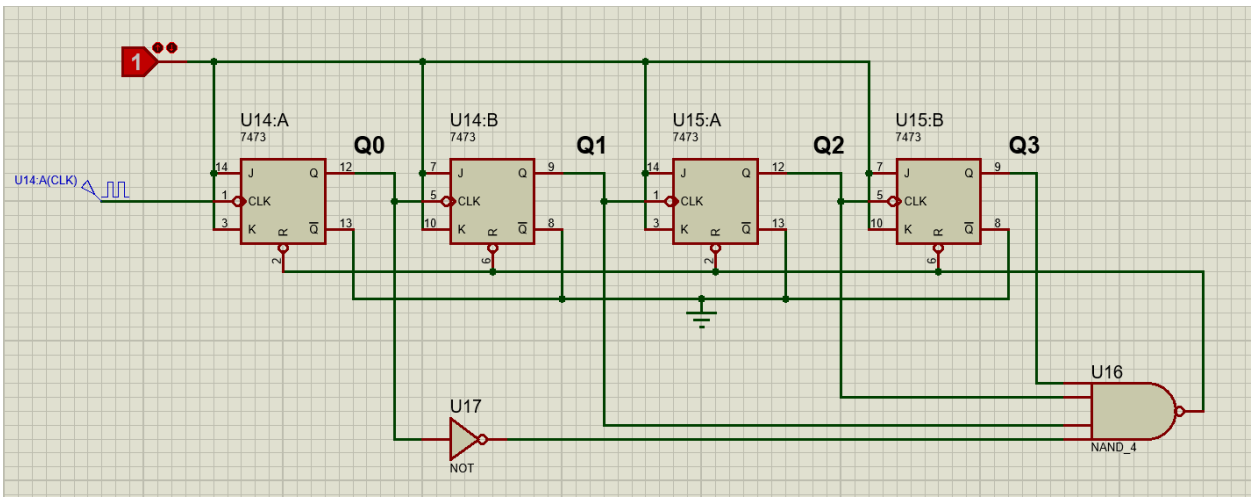

Figure.1 Asynchronous Up Counter

2.5 Traffic Light Logic Design

Logic gates are used to identify the specific ranges of states:

- **States 0–7**: Red LED ON

Inputs				Red ON state
Q_3	Q_2	Q_1	Q_0	Decimal
0	0	0	0	0
0	0	0	1	1
0	0	1	0	2
0	0	1	1	3
0	1	0	0	4
0	1	0	1	5
0	1	1	0	6
0	1	1	1	7

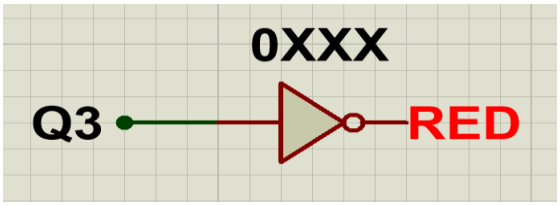

- **States 4–7**: Yellow LEDs ON

Inputs				Yellow ON state
Q_3	Q_2	Q_1	Q_0	Decimal
0	1	0	0	4
0	1	0	1	5
0	1	1	0	6
0	1	1	1	7

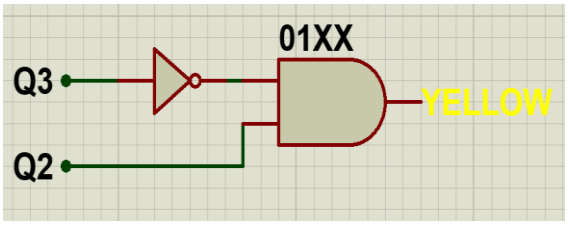

- **States 8–11**: Green LED ON

Inputs				Green ON state
Q_3	Q_2	Q_1	Q_0	Decimal
1	0	0	0	8
1	0	0	1	9
1	0	1	0	10
1	0	1	1	11

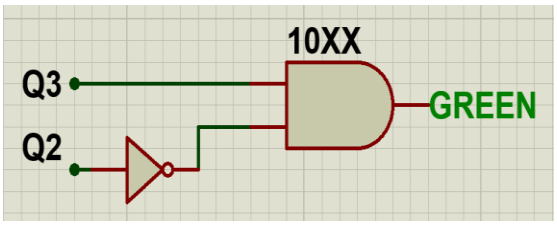

- **States 12–13**: Yellow LED ON

Inputs				YELLOW ON state
Q_3	Q_2	Q_1	Q_0	Decimal
1	1	0	0	12
1	1	0	1	13

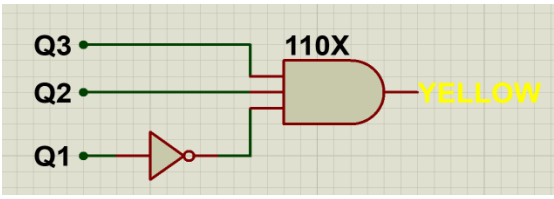

- **Reset 14:** starts new cycle

Inputs				RESET state
Q_3	Q_2	Q_1	Q_0	Decimal
0	0	0	0	0
0	0	0	1	1
0	0	1	0	2
0	0	1	1	3
0	1	0	0	4
0	1	0	1	5
0	1	1	0	6
0	1	1	1	7
1	0	0	0	8
1	0	0	1	9
1	0	1	0	10
1	0	1	1	11
1	1	0	0	12
1	1	0	1	13
1	1	1	0	14

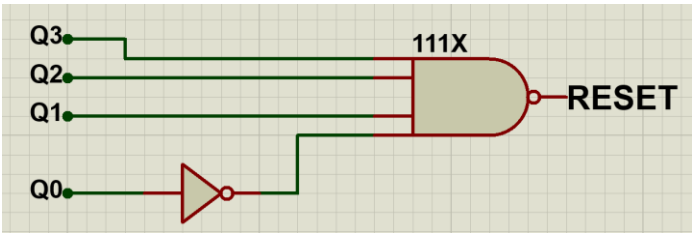

Temporary State

These outputs are directly connected to the LED indicators on the simulated traffic light pole.

2.6 Display Logic

The binary output of the counter is also connected to a BCD-to-7-segment decoder (74LS47), allowing real-time display of the current state. This improves debugging and monitoring of system behavior.

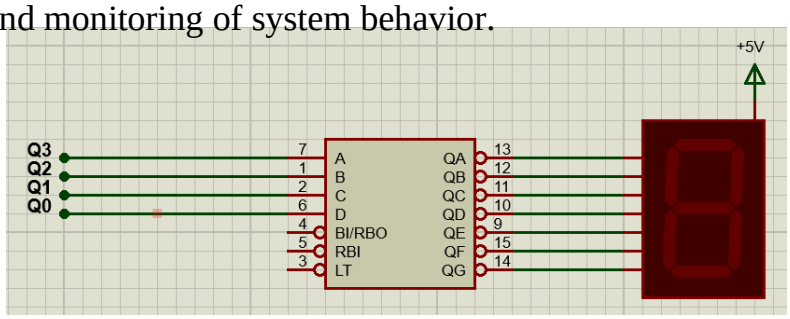

3. Results and Discussion

3.1 Simulation Behavior

Using Proteus simulation software, the design was tested with a clock signal. The simulation confirmed:

- The JK flip-flops correctly formed a 4-bit asynchronous up counter.
- The **reset logic triggered accurately when the counter reached 1110 (state 14)**.
- Logic gates decoded states accurately to light the correct LEDs.
- The 7-segment display updated with each state.

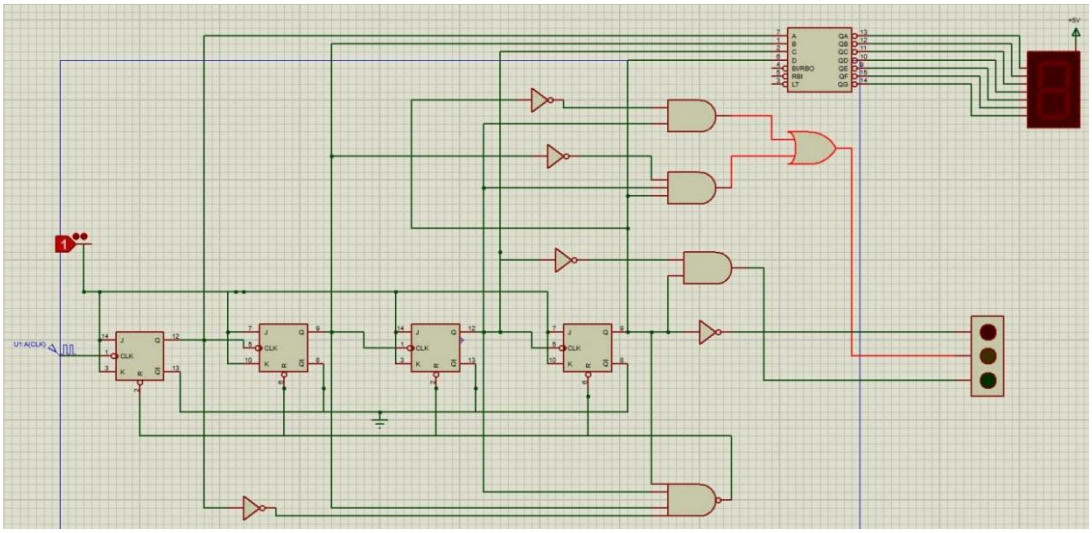

Figure 2 Traffic Light simulation design circuit

3.2 Timing and Output Behavior

State	Binary	LEDs ON	Segment Display
0–3	0000–0011	Red	0–3
4–7	0100–0111	Red + Yellow	4–7
8–11	1000–1011	Green	8–b
12–13	1100–1101	Yellow	C–d
14	1110	(Reset Triggered)	Not shown

3.3 Interpretation

The reset implementation is critical to ensure the system does not enter invalid or undefined states. With this configuration:

- The system cycles predictably through all valid states.
- There is no overflow or glitches in output logic.
- The LED behavior matches real-world traffic light patterns.

Advantage:

- Reset ensures stable cycling and prevents unexpected states.
- Simple, low-cost hardware implementation.

Limitations:

- Clock timing must be manually adjusted to real-world durations.
- Not easily adaptable for smart traffic sensing.

4. Conclusion

This project successfully demonstrates a sequential traffic light controller using **an asynchronous up counter made from JK flip-flops** and logic gates. The system includes a reset function that activates at state 14, ensuring a continuous and cyclic behavior.

The counter transitions through 14 unique states, lighting the appropriate traffic signal LEDs at each stage. The reset guarantees the system returns to the beginning without manual intervention. All aspects of the system were verified using Proteus simulation, confirming correct timing, logic, and display behavior.

The project reinforces key digital logic concepts in real-world applications without needing microcontrollers or software.